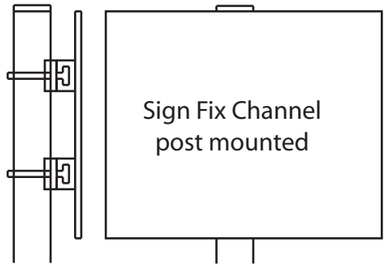

Sign Fix Channel
post mounted

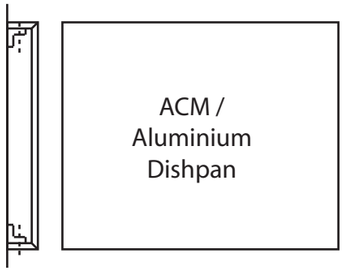

ACM /
Aluminium
Dishpan

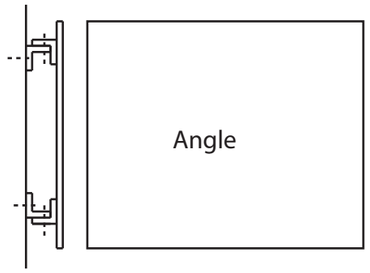

Angle

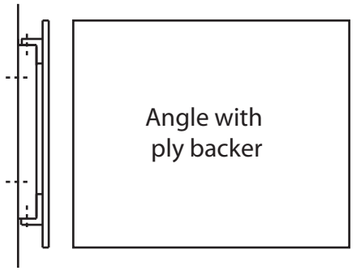

Angle with
ply backer

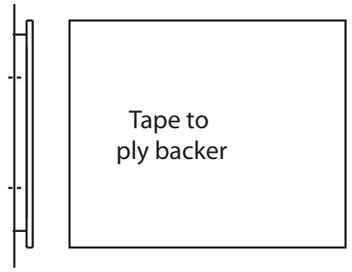

Tape to
ply backer

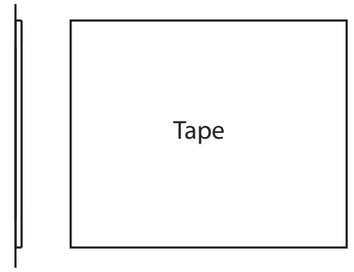

Tape

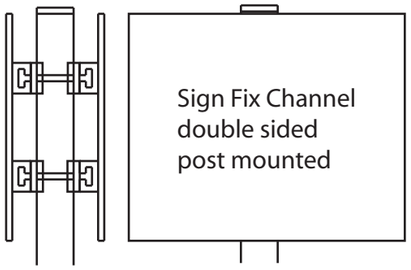

Sign Fix Channel
double sided
post mounted

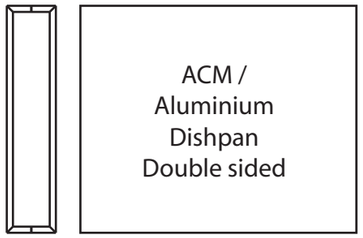

ACM /
Aluminium
Dishpan
Double sided

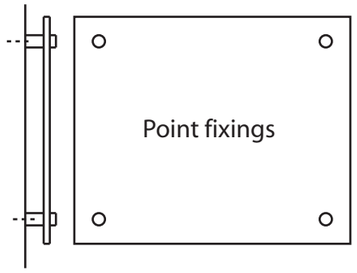

Point fixings

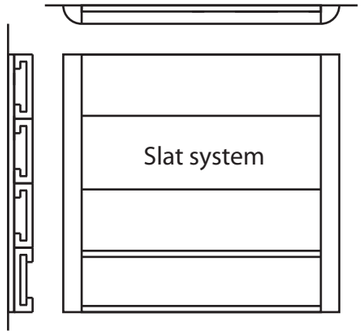

Slat system

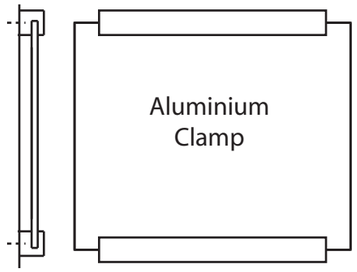

Aluminium
Clamp

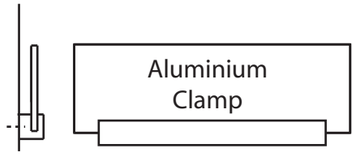

Aluminium
Clamp

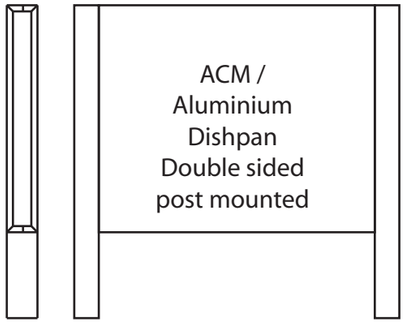

ACM /
Aluminium
Dishpan
Double sided
post mounted

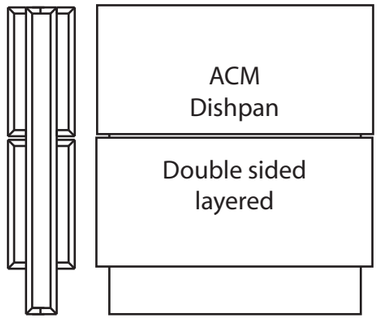

ACM
Dishpan

Double sided
layered

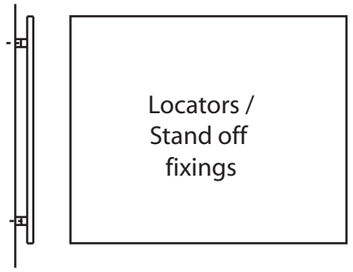

Locators /
Stand off
fixings

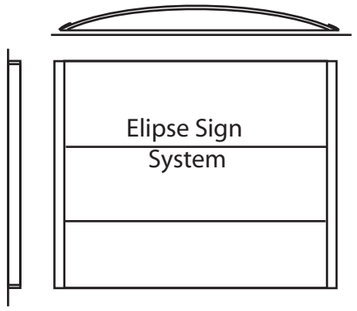

Elipse Sign
System

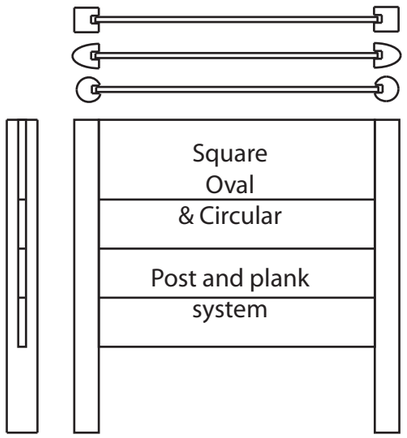

Square
Oval
& Circular

Post and plank
system

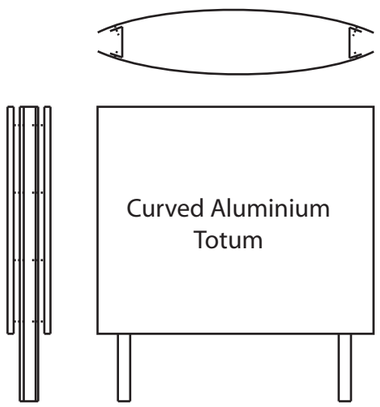

Curved Aluminium
Totum

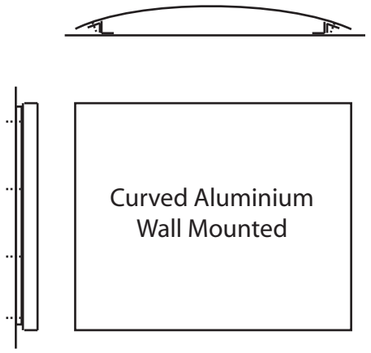

Curved Aluminium
Wall Mounted